Ouster, Inc.
350 Treat Ave.
San Francisco, CA 94110

OS1

Mid-Range High-Resolution Imaging Lidar

FIRMWARE VERSION: 3.1.x

HARDWARE VERSION: REV7

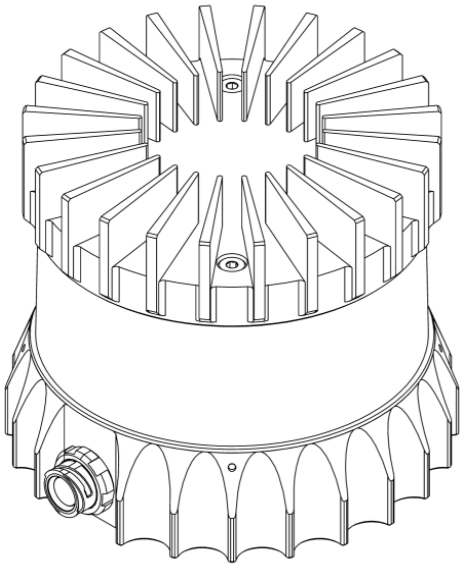

SUMMARY

The mid-range OS1 lidar sensor features 90 m range on a dark 10% target, a 42.4º vertical field of view, and high reliability for the most rugged conditions. The OS1 is designed for all-weather environments and use in industrial automation, autonomous vehicles, mapping, smart infrastructure, and robotics.

HIGHLIGHTS

- Configurable Minimum Range and Return Ordering
- Low Data Rate Profile now available with Dual Returns
- Camera-grade near-infrared and signal data
- Multi-sensor crosstalk suppression
- Ouster Studio for pointcloud evaluation
- Ouster SDK, ROS, and C++ drivers for SW development

OPTICAL PERFORMANCE

Range (80% Lambertian reflectivity, 1024 @ 10 Hz mode)	170 m @ >90% detection probability, 100 klx sunlight
Range (10% Lambertian reflectivity, 1024 @ 10 Hz mode)	90 m @ >90% detection probability, 100 klx sunlight
Minimum Range	0.0 m (0.3 m optional, and 0.5 m default)
Vertical Resolution	32, 64, or 128 channels
Horizontal Resolution	512, 1024, or 2048 (configurable)
Rotation Rate	10 or 20 Hz (configurable)
Field of View	Vertical: 42.4° ± 1.0° (+21.2° to -21.2°) Horizontal: 360°
Angular Sampling Accuracy	Vertical: ±0.01° / Horizontal: ±0.01°
False Positive Rate	1/10,000
Range Resolution	0.1 cm **Note**: For *Low Data Rate Profile* the Range Resolution = 0.8 cm
# of Returns	up to 2
Return Order	Strongest to Weakest, Farthest to Nearest, and Nearest to Farthest

Range Precision (Typical on Lambertian and Retroreflective targets beyond 1 m, 1024 @ 10 Hz mode, 1 standard deviation) **Note:** Precision is calculated based on the standard deviation of 100 measurements on a static target at a given range	Min: ±0.5 cm, Max: ±3 cm 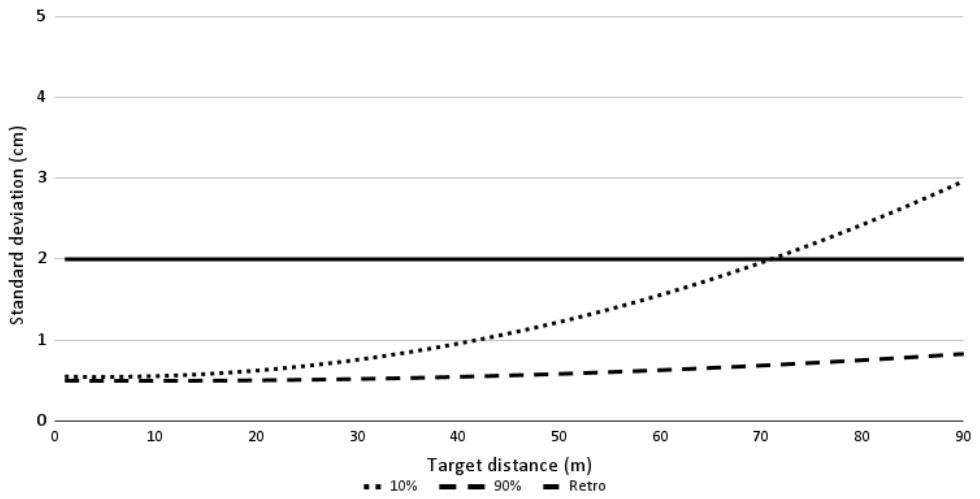
Range Accuracy (Typical on Lambertian and Retroreflective targets beyond 1 m, 1024 @ 10 Hz mode) **Note:** Accuracy is calculated based on the error between the mean of 100 measurements on a static target at a given range and the true range	±2.5 cm for lambertian targets, ±5 cm for retroreflective targets 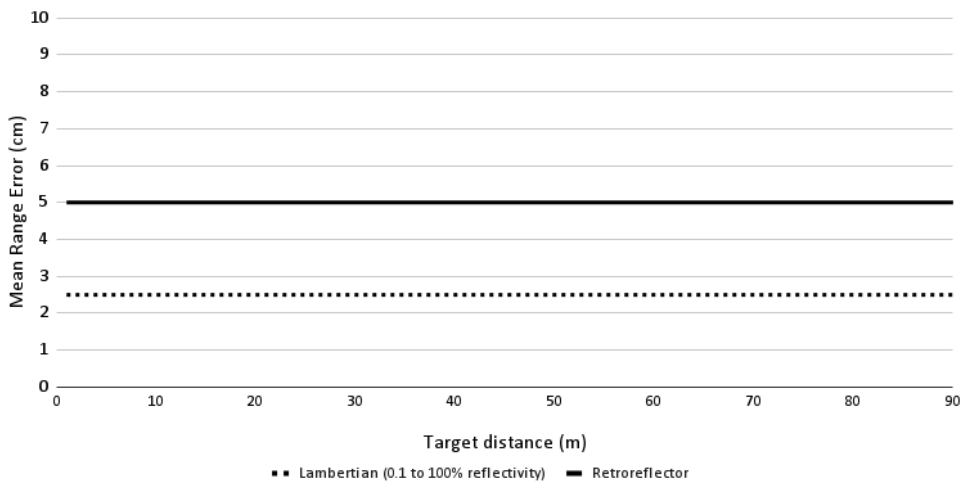

LASER

Laser Product Class	Class 1 eye-safe per IEC/EN 60825-1: 2014
Laser Wavelength	865 nm
Beam Diameter Exiting Sensor	9.5 mm
Beam Divergence	0.18° (FWHM)

LIDAR OUTPUT

Connection	UDP over gigabit Ethernet
Points Per Second	1,310,720 (32 channel) 2,621,440 (64 channel) 5,242,880 (128 channel)
Data Rate (megabits per second) (Low Data Rate Profile, 1 return, 1024 @ 10 Hz mode)	up to 11.83 Mbps (32 channel) up to 22.32 Mbps (64 channel) up to 43.29 Mbps (128 channel)
Data Rate (megabits per second) (Low Data Rate Profile, 2 returns, 1024 @ 10 Hz mode)	up to 22.32 Mbps (32 channel) up to 43.29 Mbps (64 channel) up to 85.24 Mbps (128 channel)

Data Rate (megabits per second) (Single Return Profile, 1024 @ 10 Hz mode)	up to 32.81 Mbps (32 channel) up to 64.26 Mbps (64 channel) up to 127.18 Mbps (128 channel)
Data Rate (megabits per second) (Dual Return Profile, 1024 @ 10 Hz mode)	up to 43.29 Mbps (32 channel) up to 85.24 Mbps (64 channel) up to 169.12 Mbps (128 channel)
Data Per Point	Range, Signal, Reflectivity, Near-infrared, Channel, Azimuth angle, and Timestamp
Timestamp Resolution	< 1 µs
Data Latency	< 10 ms
Data Integrity	End to End CRC that covers entire data packet

IMU OUTPUT

Connection	UDP over 1000Base-T or 1000Base-T1
Samples Per Second	100
Data Per Sample	3 axis gyro, 3 axis accelerometer
Timestamp Resolution	< 1 µs
Data Latency	< 10 ms
Additional Details	InvenSense IAM-20680HT; datasheet for more details: https://invensense.tdk.com/download-pdf/iam-20680ht-datasheet/

CONTROL INTERFACE

Connection	HTTP API	
Time Synchronization	Input sources: • IEEE1588 Precision Time Protocol (PTP); Accuracy: <1 ms error • gPTP; Accuracy: <1 ms error • NMEA $GPRMC UART message support • External PPS; Accuracy: <1 ms error • Internal 10 ppm drift clock; Accuracy: <20 ppm error Output sources: • Configurable 1 - 60 Hz output pulse	
Lidar Operating Modes	• x 512 @ 10 Hz or 20 Hz • x 1024 @ 10 Hz or 20 Hz • x 2048 @ 10 Hz	

Additional Programmability	• Multi-sensor phase lock
	• Queryable intrinsic calibration information:
	  • Beam angles
	  • IMU pose correction matrix
		• Return ordering
		• Minimum range
		• Azimuth masking
		• Low-power standby mode

MECHANICAL/ELECTRICAL

Power Consumption	14 - 20 W • 16 W nominal • 28 W peak at startup if operating at -40 °C **Note:** Ouster recommends use of a power supply of no less than 30 W if using in cold conditions
Connector	Standard 1000BASE-T or Automotive Standard 1000BASE-T1
Operating Voltage	9.5 V - 51 V • Suitable for 12 VDC to 24 VDC nominal systems • Not suitable for 48 V nominal battery based systems • Under-voltage WARNING level alert occurs at 9.5 VDC at the connector • Under-voltage ERROR level alert occurs at 9.0 VDC at the connector • Below 9.0 VDC at connector, sensor may shutdown • Over-voltage conditions/alarms occur at 51 VDC at the connector • Over-voltage lockout onset at 58 VDC (±1 V) at the connector • Over-voltage lockout release at 55 VDC (±1 V) at the connector

Dimensions	Diameter: 87 mm (3.42 in) Height: • Without cap: 58.35 mm (2.3 in) • With thermal cap: 74.2 mm (2.9 in)
Weight	Without cap: 410 g (14.5 oz) With radial cap: 482 g (17.0 oz) With halo cap: 502 g (17.7 oz)
Mounting	Bottom: 4x M3 screws, 2x locating 2 mm pin holes Top: 4x M3 screws, 4x locating 2 mm pin holes, 1x M6 screw

OPERATIONAL

Operating Temperature	-40 °C to +60 °C (with mount) Between +53 °C and +60 °C, sensor automatically reduces range (max 20% range reduction)
Storage Temperature	-40 °C to +105 °C
Ingress Protection	IP68 (1 m submersion for 1 hour, with I/O cable attached) IP69K (with I/O cable attached)
Shock	IEC 60068-2-27 (Amplitude: 100 g, Shape: 11 ms half-sine, 3 shocks x 6 directions)
Vibration	IEC 60068-2-64 (Amplitude: 3 G-rms, Shape: 10 - 1000 Hz, Mounting: sprung masses, 3 axes w/ 8 hr duration each)
Compliance **Note:** Ouster UK (Ltd): 125 Princes Street, Edinburgh EH2 4AD, Scotland, United Kingdom Contact: Neil Calder, Phone Number: +44(0).131.563.9078	**For US** Laser Safety: • IEC 60825-1:2014 Class 1 eye safe • FDA US 21CFR1040 Notice 56 Class 1 Product Safety: • UL 62368-1 • UL 60950-22 (outdoor use) • CSA-C22.2 No. 62368-1-19 • CSA-C22.2 No. 60950-22-07 (outdoor use) EMC: FCC 47CFR Part 15, Subpart B, Class A **For EU** Laser Safety: EN 60825-1:2014+A11:2021– Class 1 eye safe Product Safety: EN/IEC 62368-1 EMC: • EN 55032:2012/AC 2013; CISPR 32:2015 • EN 55035:2017/A11:2020 • EN 61000-3-2:2014 • EN 61000-3-3:2013 **For Korea** • KS C 9832:2023 • KS C 9835:2019 **For Australia:** AS/NZS CISPR 32: 2015

ACCESSORIES

Interface Box	Polycarb/FR4, 100 g, 75 mm x 50 mm x 25 mm (LxWxH), 2 m CAT6 cable, 24 V power adapter, 5 m sensor cable
Mount	Aluminum, 530 g, 110 mm x 110 mm x 20.5 mm (LxWxH), 4 x M8 thru holes

SOFTWARE

Sample Drivers	Ouster SDK, ROS, C++
Visualizer	Ouster Studio

EXTERIOR DIMENSIONS

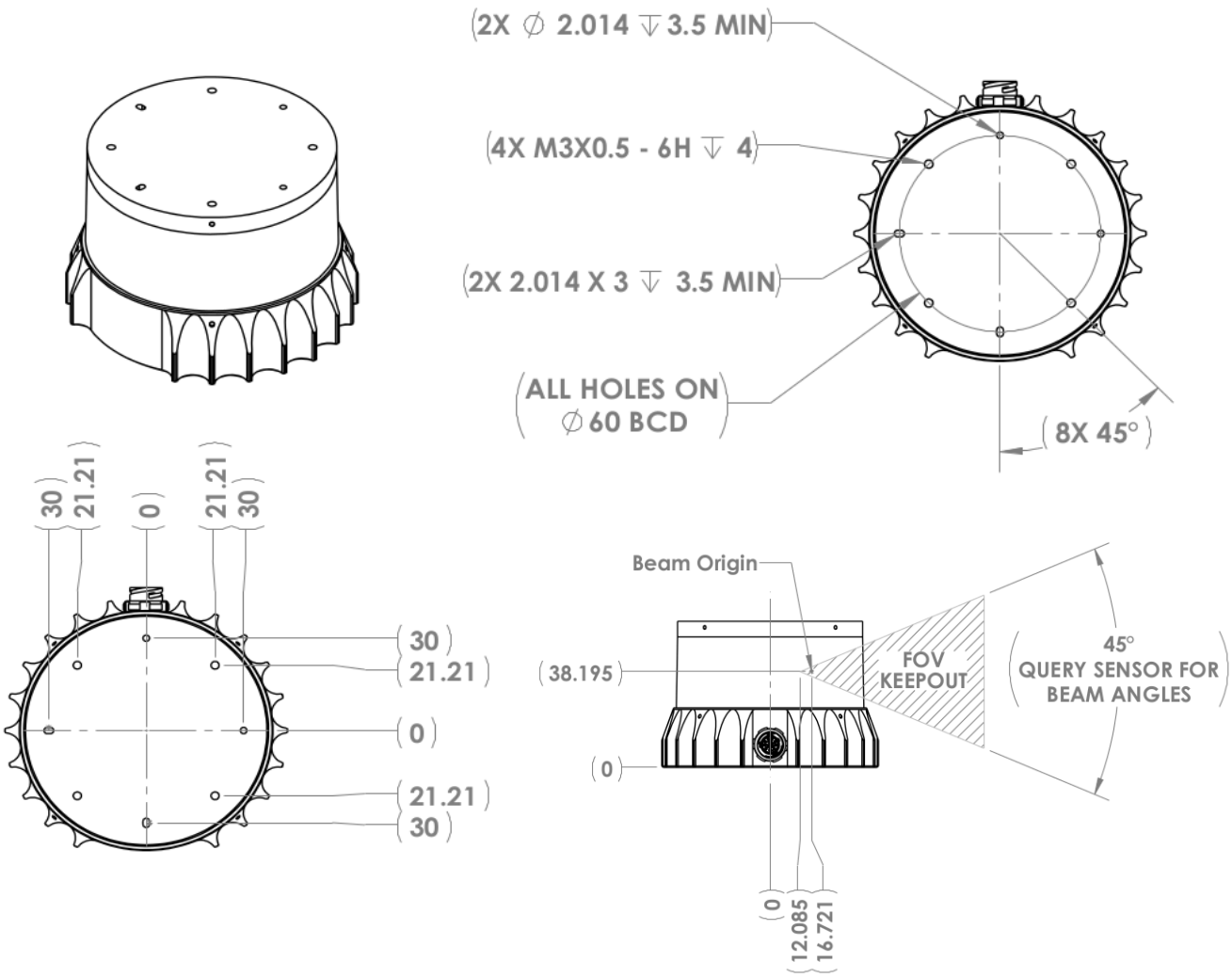

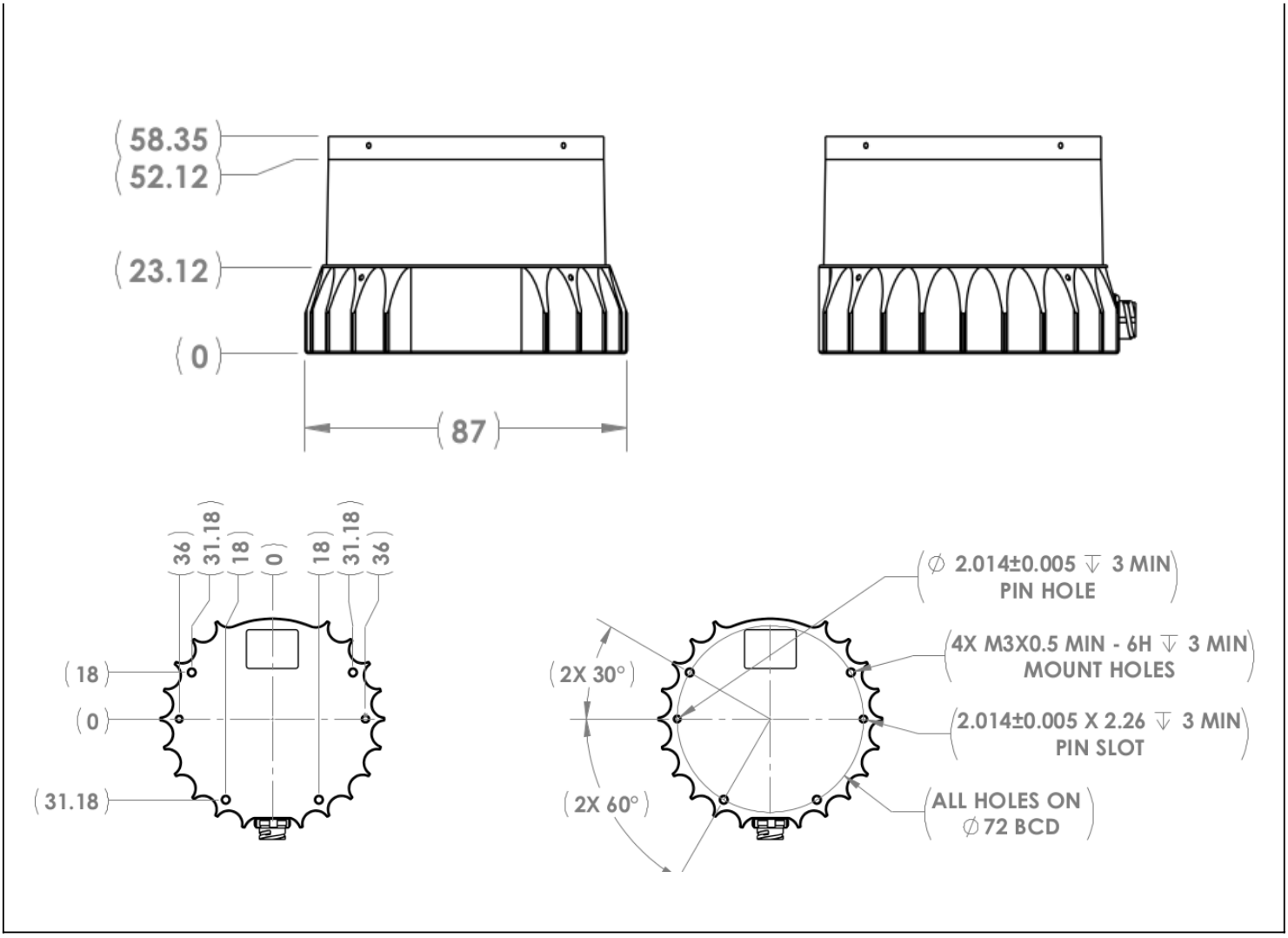

*Specifications are subject to change without notice.

WWW.OUSTER.COM

REV: 12/2024 • © 2024 Ouster, Inc. • All rights reserved